## Electrical diagram

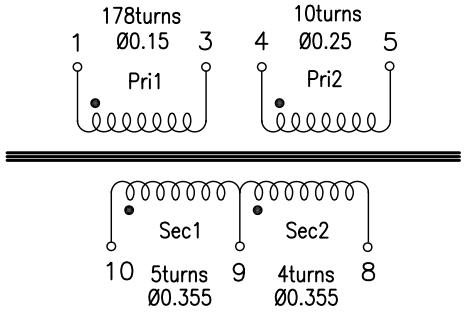


## Drawing

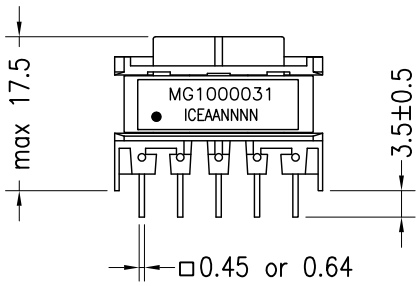


bottom view

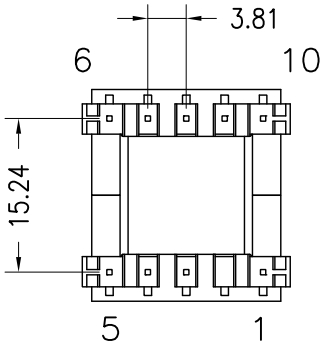


pin 2 not present

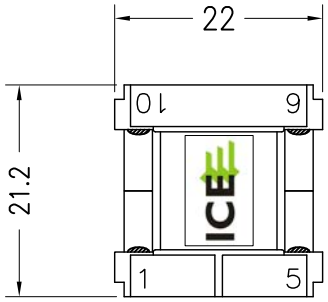


Dimensions in millimeters

2011/65/UE (RoHS-2) Compliant

## General features

| | |
|---|---|
| Core size | E20/10/6 |
| Inductance Pri1 | 6.42mH ±10% |
| Dielectric strength Pri1+Pri2/Sec1+Sec2 | 2000V – 50Hz |
| Dielectric strength Pri1/Pri2 | 500V – 50Hz |
| Operative frequency | 100kHz |
| Thermal class | B 130°C |
| | |
| | |

| REV | APPR DATE | REF. MOD. | DESCRIPTION OF MODIFICATION | EDITING | CHECKING AND APPROVAL |
|---|---|---|---|---|---|
| 01 | 22.08.17 | | Emission | C. Picciani | D. Di Giorgio |

DESCRIPTION: **Flyback Transformer EF20 10W/14V/12V/5V (MG1000031)**

| Mod. AQ 05.09 | DOCUMENT TYPE | P/N | REVISION | RELEASE DATE | PAGE |
|---|---|---|---|---|---|
| | S.T. | 8032.0304.087 | 01 | 22.08.17 | 1of1 |